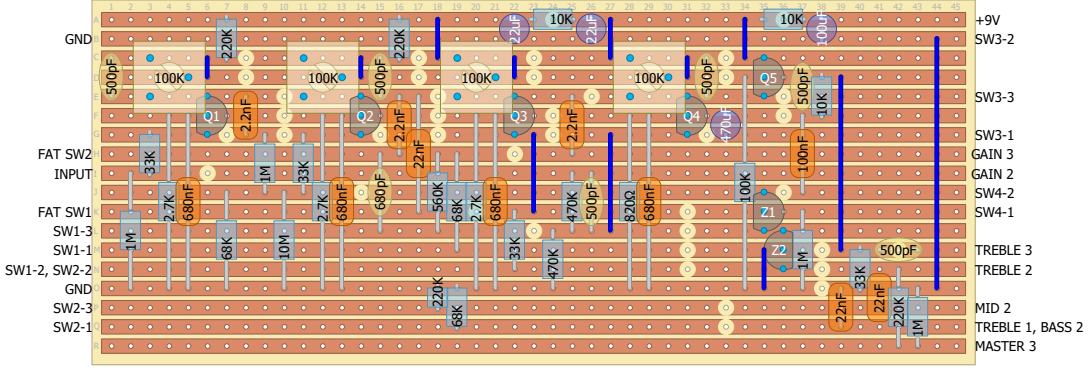

GAIN 1, MID 1, MASTER 1 GND
BASS 1, MID 3
MASTER 2 OUTPUT

GAIN 1MA, TREBLE 250KB, BASS 1MA, MID 25KB, MASTER 1MA

45 X 18, 40 CUTS, 12 JUMPERS